Goals:

- How to communicate with an external device using I²C
- Be familiar with IO expanders; An IO expander is a common IC for expanding number of IOs for a microcontroller, thus allow the use of smaller MCUs.

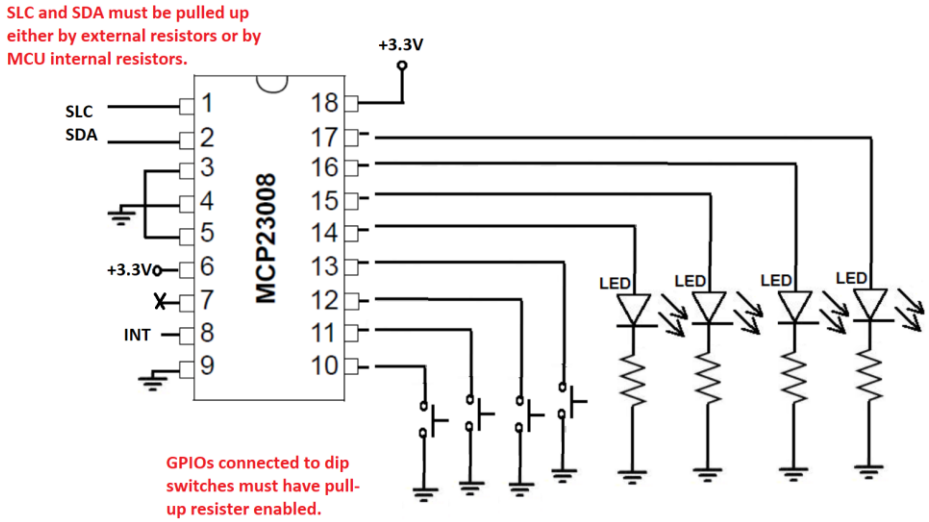

Setup:

- The device we are using is Microchip I²C IO expander (Check the datasheet: MCP23008)
- Connections:
  - Connect 4 LEDs and 4 dip switches to IO expander as shown in the image above
  - Connect power and ground as shown.
  - Connect the device I²C signals to PB8 and PB9 (to use MCU I2C1 peripheral)
  - Connect the IO expander INT signal to PC6.

Requirements:

- You need to write a program that makes the 4 LEDs follow the dip switches. In other words, when the value of the switches change, the LEDs must follow.
- You are free to choose the way you design your code.
- **Notes:**
  - You can either add two pull up resistors (~2.2KΩ) to the I²C bus lines **OR** You can use the MCU internal pull-up resisters for the I²C signals, check GPIO register PUPDR. The MCU internal resisters are not optimized for the I²C bus use so you may need to slowdown the speed of the I²C (100Khz is a good target).
  - The IO expander has internal pull-up resistors on the GPIO pins which must be enabled for the dip switches connected to GPIO0-3 (controlled using register GPPU).
- Do not use any prebuilt high-level functions but you may use your functions developed in previous labs. Like what you learned in class, write your program in a register level abstraction.
- Add comments to each line in your code.